NU-FLAME
ENERGIS RANGE
THE HIGHEST EFFICIENCY OPEN FRONTED, INSET GAS FIRES ...
5 YEARS PEACE OF MIND
Details Inside
...UNRIVALLED FOR EFFICIENCY, HEAT OUTPUT AND LOW RUNNING COSTS.

Affordable quality, attention to detail, low running costs, made in the UK.

For nearly 25 years Nu-Flame has brought together the very best of British Innovation, Design and Engineering to give our customers a range of quality gas fires with the authentic look of a traditional flame. The Nu-Flame range is available only from specially selected fireplace showrooms offering unrivalled customer service. These knowledgeable and friendly local stockists will give you all the necessary advice to help you choose a Nu-Flame fire to suit your individual requirements.

Nu-Flame, a family run business, has invested heavily in our own state of the art factory in Surrey. Unlike some companies, we choose to manufacture all of our fires here in the UK and this enables us to ensure that your fire is built to the highest standards as well as allowing us to react quickly to any changes in the marketplace.

Great design is at the heart of everything we do. Nu-Flame fires combine the latest technologies with tradition and contemporary trends and certainly stand out from the crowd.

Bring a sense of elegance and luxury to the heart of your home. Choose Nu-Flame.

Nu-Flame fires come with a 5 year peace of mind option... ask your stockist for details.

For a reasonable one off payment, the warranty on your Nu-Flame fire can be extended to 5 years. Your stockist can advise you of the current rates.

Q. Why is the Nu-Flame extended warranty option better than other manufacturers' long term guarantees?

A. Our offer represents much better value for money, without hidden terms and conditions that are likely to void your warranty after the first year, or, if followed, can cost you considerably more than the purchase price of the fire.

Nu-Flame would like to thank Capital Fireplaces for supplying the fireplaces used in this brochure, also thanks to Glasswells (World of Furniture) 01473 622422 for kindly lending us furniture.

Photography, Design and Production by TPW Graphics Ltd (01206) 393888

CONTENTS

	Page
Information	3
Energis Hotbox	4 - 7
Energis Ultra 2	8 - 11
Energis Slimline Ultra 2	12 - 15
Energis Vista	16 - 19
Energis Slimline Vista	20 - 23
Frames	24
Frets	25
Technical Information, Controls & Flue Types	26 - 27
Contact Details	28

Every Nu-Flame fire is built to ISO 9001 and CE quality standards.

Nu-Flame is an award winning company

BRITISH MADE

All measurements in this brochure are in mm and are approximate. Dimensions are for general information only. For full details of builders openings or fireplace construction purposes etc please contact your stockist.

Front cover photo: Energis Ultra 2 with Black/Chrome cast frame and Traditional Chrome/Black fret

Back cover photo: Energis Vista with Chrome effect Profiled frame and Novello Chrome fret

Energis Range - Open Fronted, Maximum Efficiency!

With the introduction of our Energis range, Nu-Flame raised the bar on the performance of open fronted Fuel Effect Gas Fires. Not content to stop there, due to its success we have now expanded our range! No other range of open fronted fuel effect gas fires comes close to the Energis range for its combination of Efficiency, Heat Output, Style and Low Running Costs, with efficiencies independently verified to the latest British Standard. With instant control, no mess, and low emissions, Energis high efficiency gas fires are the ideal choice for your room heating requirements.

The ***New Energis Hotbox***, featured on pages 4 to 7 of this brochure, is a completely open fire with no hood, clean lines and a full depth fuel bed for maximum realism. With its efficiency of 67.9% and an output of 4.25kW, exceptional for this type of fire, the Energis Hotbox clearly stands out from the crowd.

The ***Energis Ultra 2***, shown on pages 8 to 11 of this brochure, is a traditional design with breakthrough technology providing an outstanding efficiency of 77%. With a whopping output of 4.82kW, the Energis Ultra 2 will provide sufficient heat for most living rooms without the need to run your central heating, yet with the controllability to turn it down to a 'minimal' heat level.

The ***New Energis Slimline Ultra 2***, pages 12 to 15, is suitable for almost any fireplace depth. With a phenomenal efficiency of 73.5%, an outstanding 4.5kW output and fuel bed that looks surprisingly deep for a slimline model, this is definitely a fire to enhance any home.

The ***Energis Vista***, pages 16 to 19 of this brochure, is unlike any fire you have ever seen. With its Vu-Tech* glass canopy, more of the glowing fuel bed and flickering flames can be seen from whatever position you choose. Sitting, standing, viewing face on or from an angle there is no black canopy to restrict the view of the most important part of the fire. This radically different approach to fire design has enabled us to produce the highest efficiency, high output, open fronted fuel effect gas fire on the market today. With a breath-taking efficiency of 79.7% and a heat output of 4.99kW the Energis Vista has redefined fire design for the 21st Century.

The ***New Energis Slimline Vista***, pages 20 to 23, features our Vu-Tech* glass canopy, allowing the full effect of the fire to be seen from almost any angle, yet this slimline version can be fitted in almost any depth of fireplace. Just as you would expect with our innovative design we have achieved an amazing efficiency of 74.2%, a heat output of 4.64kW and a great looking fuel bed. This fire will definitely exceed your expectations.

All Energis models are available with a wide choice of trims that are shown on different fires throughout the brochure and the full range of control options, covering; Manual Control, 3 Button Fully Sequential High Level Control and Fully Sequential Hand Held Remote Control. All options are available for use with either Natural Gas or LPG.

By choosing a Nu-Flame High Efficiency Energis Gas Fire, instead of a less efficient alternative, you will use less gas to heat your room and the carbon emissions will be lower.

* Patent pending

Energis Hotbox

Energis Ultra 2

Energis Slimline Ultra 2

Energis Vista

Energis Slimline Vista

Energis
Hotbox

Energis Hotbox with Black/Polished Stainless Silhouette frame and Traditional Chrome/Black fret

Energis Hotbox with Black/Antique Cast frame and Traditional Antique/Black fret

Energis
Hotbox

Energis Hotbox with Textured Black Profiled frame and Novello Black fret

Be inspired by our fires, create the style you've always dreamed of. The ***New*** Energis Hotbox from Nu-Flame features a completely open front and full depth fuel bed for maximum realism to enhance any room. The Energis Hotbox is distinctively individual, unique in its design, giving a natural realistic effect with a superb efficiency of 67.9%. A fire that will exceed your expectations.

3 Sided frame finishes Fireplace models only:
Choose from **Flat**, **Profiled**, **Silhouette** or **Cast** styles, in a choice of beautiful finishes.
See pages 24 and 25 for the full frame and fret selection.

Fireplace model

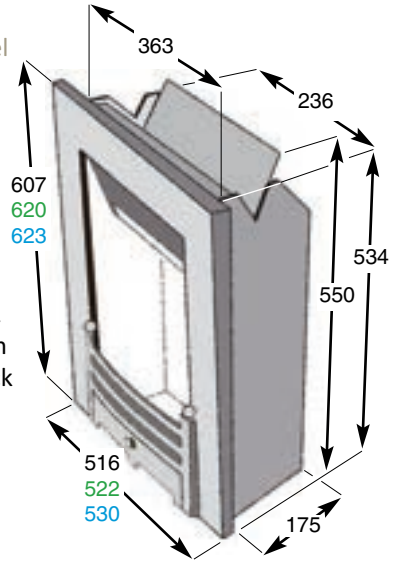

Flat frame, Silhouette frame & Contemporary Trim sizes shown in black
Profiled frame sizes shown in green
Cast frame sizes shown in blue

Our efficiency & output figures are the results of tests to BS7977-1:2009+A1:2013. Please see page 26 for further details

67.9% Efficiency

Energis Hotbox with Satin Black Contemporary Trim

Energis
Hotbox
Contemporary Trim

- Controls:
  Manual, 3 Button Fully Sequential High Level or Fully Sequential Remote Control
- Gas Type:
  Natural Gas or LPG
- Class 2 Efficiency:
  67.9% Net (Nat.Gas)
  67.2% Net (LPG)
- Output on High:
  4.25kW (Nat.Gas)
  4.25kW (LPG)
- Ventilation:
  Not normally required
- Interior:
  Plain black
- Effect:
  Coal
- Flue Types:
  Class 1 or 2, Pre-Cast

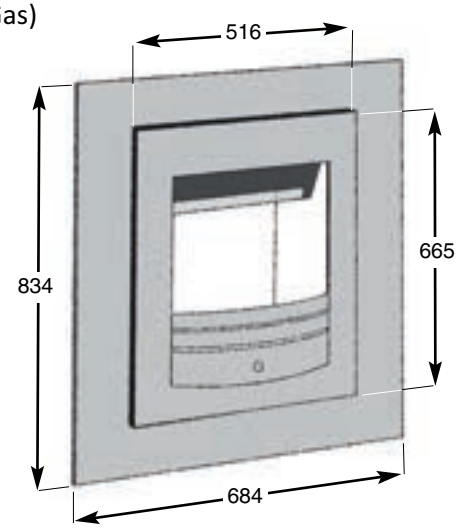

Hole in the Wall model

Contemporary Trim finishes

Fireplace & Hole in the Wall models:

Brushed Stainless, Lacquered Brushed Stainless, Satin Black, Holographic Black, Antique Gold, Gun Metal

Outer Frame finishes for Contemporary Trim

Hole in the Wall models:

Lacquered Brushed Stainless, Holographic Black, Marfil Stone, Gun Metal

Size 684 x 834

Measurements of visible parts only are shown. For further measurements please see page 5. For fireplace model see page 5.

Energis
Hotbox
Arc Trim

Energis Hotbox with Noir Arc Trim

Energis Hotbox Hole in the Wall with Lacquered Brushed Stainless Arc Trim and Lacquered Brushed Stainless 4 Sided Outer Frame

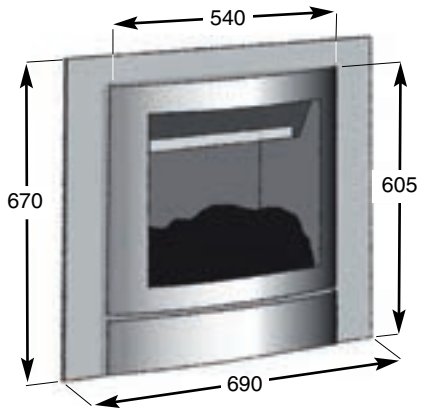

Fireplace model

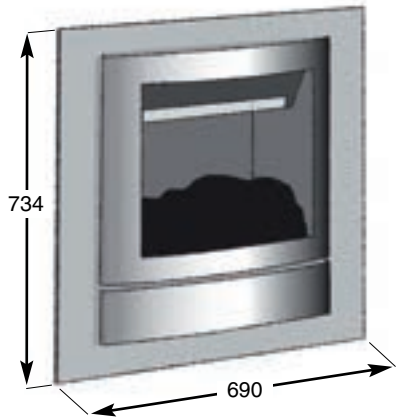

Hole in the Wall model

Measurements of visible parts only are shown. For further measurements please see page 5.

This fire is a statement piece, adding a touch of style with the warmth you would expect from an output of 4.25kW.

The Energis Hotbox can be used with our Arc Trim in a fireplace, giving a modern touch to an already realistic flame.

The fireplace version of the Arc Trim can be used without an Outer Frame, as shown above, or with an Outer Frame as shown on page 11.

Arc Trim finishes Fireplace & Hole in the Wall models:
Lacquered Brushed Stainless, Noir, Phosphorus

Outer Frame finishes for Arc Trim Fireplace & Hole in the Wall models:
Lacquered Brushed Stainless, Satin Black

67.9% Efficiency

Energis Ultra 2

Energis Ultra 2 with Black/Chrome Cast frame and Traditional Chrome/Black fret

Energis
Ultra 2

Energis Ultra 2 with Black/Brass Silhouette frame and Traditional Antique/Black fret

Energis Ultra 2 with Brass effect Profiled frame and Lyric Antique fret

Fireplace model

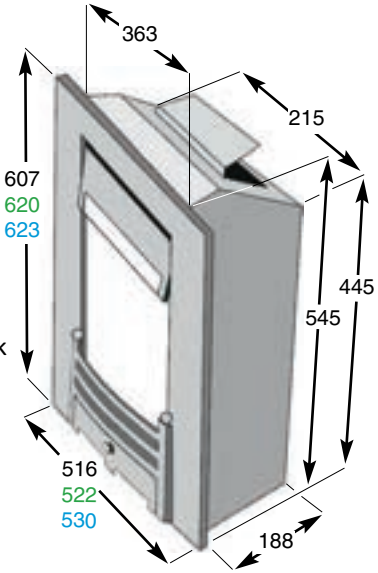

Flat frame, Silhouette frame & Contemporary Trim sizes shown in black
Profiled frame sizes shown in green
Cast frame sizes shown in blue

The Energis Ultra 2 has an efficiency of 77% and heat output of 4.82kW, which are phenomenal figures for an open fronted fire. The fact that we have accomplished this without compromise to the classic styling of the fire is another achievement altogether. With a superb choice of frames, frets and finishes the Energis Ultra 2 can be configured to complement any style of room.

3 Sided frame finishes Fireplace models only:
Choose from **Flat**, **Profiled**, **Silhouette** or **Cast** styles, in a choice of beautiful finishes. See pages 24 and 25 for the full frame and fret selection.

GB Patent

Our efficiency & output figures are the results of tests to BS7977-1:2009+A1:2013. Please see page 26 for further details

77% Efficiency

Energis Ultra 2 with Lacquered Brushed Stainless Contemporary Trim

Energis
Ultra 2
Contemporary Trim

- **Controls:**
  Manual, 3 Button Fully Sequential High Level or Fully Sequential Remote Control
- **Gas Type:**
  Natural Gas or LPG
- **Class 1 Efficiency:**
  77.0% Net (Nat.Gas)
  77.0% Net (LPG)
- **Output on High:**
  4.82kW (Nat. Gas)
  4.81kW (LPG)
- **Ventilation:**
  Not normally required
- **Interior:**
  Plain black
- **Effect:**
  Coal
- **Flue Types:**
  Class 1 or 2, Pre-Cast

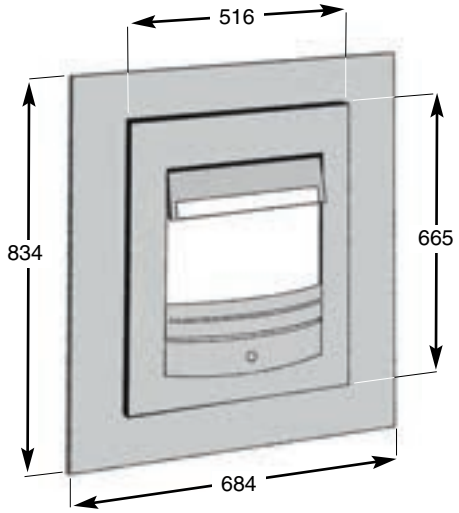

Hole in the Wall model

Contemporary Trim finishes

Fireplace & Hole in the Wall models:

Brushed Stainless, Lacquered Brushed Stainless, Satin Black, Holographic Black, Antique Gold, Gun Metal

Outer Frame finishes for Contemporary Trim

Hole in the Wall models:

Lacquered Brushed Stainless, Holographic Black, Marfil Stone, Gun Metal
Size 684 x 834

Measurements of visible parts only are shown.
For further measurements please see page 9.
For fireplace model see page 9.

Energis
Ultra 2
Arc Trim

Energis Ultra 2 with Noir Arc Trim and Satin Black 3 Sided Outer Frame

Energis Ultra 2 Hole in the Wall with Lacquered Brushed Stainless Arc Trim and Satin Black 4 Sided Outer Frame

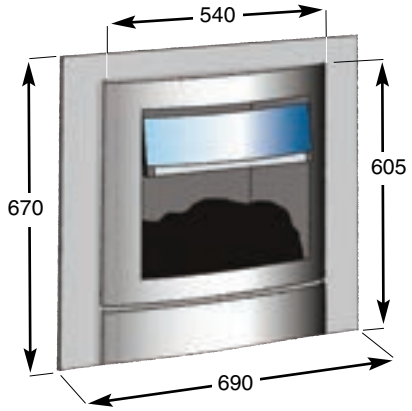

Fireplace model

Hole in the Wall model

Measurements of visible parts only are shown. For further measurements please see page 9.

Available for use with a fireplace or as a Hole in the Wall feature, the Nu-Flame Arc Trim comes in a choice of finishes enabling you to create a perfect complement to your home. When fitted in a fireplace the Arc Trim can be used with an Outer Frame, as shown above, or without an Outer Frame as shown on page 7.

When used with one of our high efficiency open fronted fires, the flawless lines of the Arc Trim will bring sophistication and warmth to any room, making it the ultimate place to relax.

Arc Trim finishes **Fireplace & Hole in the Wall models:**
Lacquered Brushed Stainless, Noir, Phosphorus

Outer Frame finishes for Arc Trim **Fireplace & Hole in the Wall models:**
Lacquered Brushed Stainless, Satin Black

77% Efficiency

Energis Slimline
Ultra 2

Energis Slimline Ultra 2 with Brass Flat frame and Novello Antique fret

Energis Slimline
Ultra 2

Energis Slimline Ultra 2 with Brushed Stainless Flat frame and Lyric Brushed fret

Energis Slimline Ultra 2 with Black/Brushed Silhouette frame and Traditional Brushed/Black fret

Fireplace model

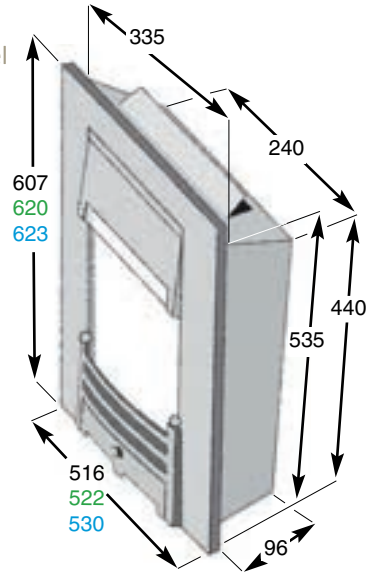

Flat frame, Silhouette frame & Contemporary Trim sizes shown in black
Profiled frame sizes shown in green
Cast frame sizes shown in blue

Transform your home to create something special with our ***New*** Energis Slimline Ultra 2. A completely open fronted fire that boasts an impressive net efficiency of 73.5% with an elegant and graceful flame pattern. Our impressive design allows the Energis Slimline Ultra 2 to look surprisingly deep for a slim fire. With a heat output of 4.6kW, it's a smart solution!

3 Sided frame finishes Fireplace models only:
Choose from **Flat**, **Profiled**, **Silhouette** or **Cast** styles, in a choice of beautiful finishes.
See pages 24 and 25 for the full frame and fret selection.

Our efficiency & output figures are the results of tests to BS7977-1:2009+A1:2013. Please see page 26 for further details

73.5% Efficiency

Energis Slimline
Ultra 2
Contemporary Trim

- Controls:
  Manual, 3 Button Fully Sequential High Level or Fully Sequential Remote Control
- Gas Type:
  Natural Gas or LPG
- Class 1 Efficiency:
  73.5% Net (Nat.Gas)
  72.0% Net (LPG)
- Output on High:
  4.60kW (Nat.Gas)
  4.50kW (LPG)
- Ventilation:
  Not normally required
- Interior:
  Plain black
- Effect:
  Coal
- Flue Types:
  Class 1 or 2, Pre-Cast

Energis Slimline Ultra 2 with Lacquered Brushed Stainless Contemporary Trim

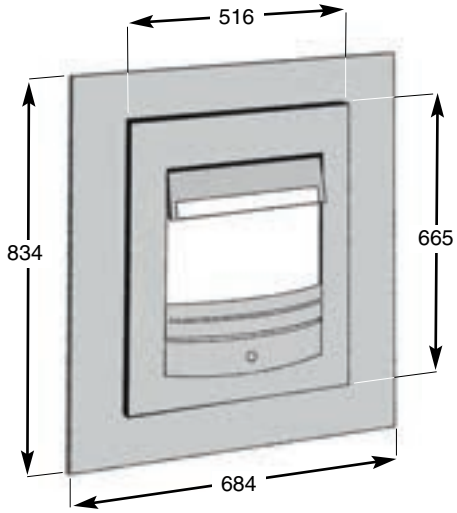

Hole in the Wall model

Contemporary Trim finishes

Fireplace & Hole in the Wall models:

Brushed Stainless, Lacquered Brushed Stainless, Satin Black, Holographic Black, Antique Gold, Gun Metal

Outer Frame finishes for Contemporary Trim

Hole in the Wall models:

Lacquered Brushed Stainless, Holographic Black, Marfil Stone, Gun Metal
Size 684 x 834

Measurements of visible parts only are shown.
For further measurements please see page 13.
For fireplace model see page 13.

Energis Slimline
Ultra 2
Arc Trim

Energis Slimline Ultra 2 with Lacquered Brushed Stainless Arc Trim

Energis Slimline Ultra 2 Hole in the Wall with Noir Arc Trim and Satin Black 4 Sided Outer Frame

Fireplace model

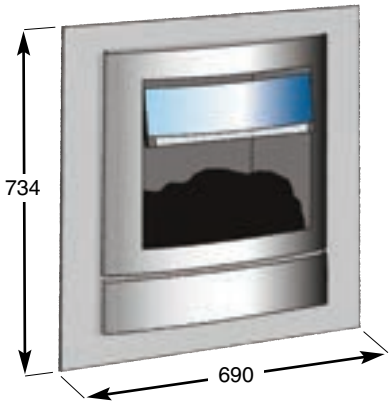

Hole in the Wall model

Measurements of visible parts only are shown. For further measurements please see page 13.

Our high quality Arc Trim is clean, simple and stunning. Couple this with the amazingly efficient and visually realistic ***New*** Energis Slimline Ultra 2 and you have harmony.

Contemporary looks, traditional values and a world leading fire that fits virtually every flue type, the Energis Slimline Ultra 2 with the Arc Trim could just be the fire for you!

Arc Trim finishes **Fireplace & Hole in the Wall models:**
Lacquered Brushed Stainless, Noir, Phosphorus

Outer Frame finishes for Arc Trim **Fireplace & Hole in the Wall models:**
Lacquered Brushed Stainless, Satin Black

73.5% Efficiency

Energis Vista

Energis Vista with Polished Stainless Flat frame and Lyric Chrome fret

Energis Vista with Chrome effect Profiled frame and Novello Chrome fret

Energis
Vista

Energis Vista with Black/Antique Cast Frame and Traditional Antique/Black fret

Fireplace model

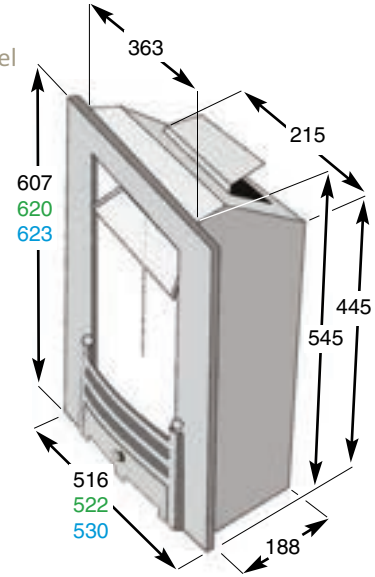

Flat frame, Silhouette frame & Contemporary Trim sizes shown in black
Profiled frame sizes shown in green
Cast frame sizes shown in blue

Forget everything you thought you knew about heating because the Energis Vista has redefined open fronted fuel effect efficiency and style. The efficiency of 79.7% and heat output of 4.99kW was previously thought to be unattainable on an open fronted fire, but Nu-Flame isn't the kind of company to let its design and development be reined in by narrow thinking. With a wide choice of the highest quality frames and frets the Energis Vista gives you elegance, beauty and state of the art technology, all in perfect harmony. Perfection without compromise.

3 Sided frame finishes Fireplace models only:
Choose from **Flat**, **Profiled**, **Silhouette** or **Cast** styles, in a choice of beautiful finishes. See pages 24 and 25 for the full frame and fret selection.

Patent pending

GB Registered Design

Our efficiency & output figures are the results of tests to BS7977-1:2009+A1:2013. Please see page 26 for further details

79.7% Efficiency

Energis Vista with Satin Black Contemporary Trim

Energis
Vista
Contemporary Trim

- Controls:
  Manual, 3 Button Fully Sequential High Level or Fully Sequential Remote Control
- Gas Type:
  Natural Gas or LPG
- Class 1 Efficiency:
  79.7% Net (Nat.Gas)
  78.4% Net (LPG)
- Output on High:
  4.99kW (Nat.Gas)
  4.90kW (LPG)
- Ventilation:
  Not normally required
- Interior:
  Plain black
- Effect:
  Coal
- Flue Types:
  Class 1 or 2, Pre-Cast

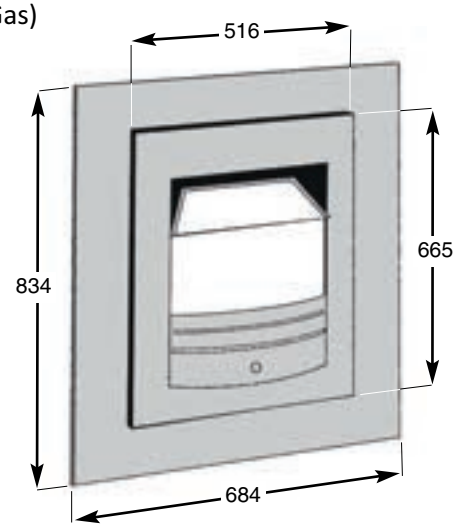

Hole in the Wall model

Contemporary Trim finishes

Fireplace & Hole in the Wall models:

Brushed Stainless, Lacquered Brushed Stainless, Satin Black, Holographic Black, Antique Gold, Gun Metal

Outer Frame finishes for Contemporary Trim

Hole in the Wall models:

Lacquered Brushed Stainless, Holographic Black, Marfil Stone, Gun Metal
Size 684 x 834

Measurements of visible parts only are shown. For further measurements please see page 17. For fireplace model see page 17.

Energis
Vista
Arc Trim

Energis Vista with Lacquered Brushed Stainless Arc Trim

With its revolutionary Vu-Tech* glass canopy the Energis Vista provides maximum visibility of the glowing fuel bed and flames. When used with our Arc Trim in a fireplace you can achieve the traditional look combined with a very modern twist.

The fireplace version of the Arc Trim can be used without an Outer Frame, as shown above, or with an Outer Frame as shown on page 11.

Energis Vista Hole in the Wall with Phosphorus Arc Trim and Lacquered Brushed Stainless 4 Sided Outer frame

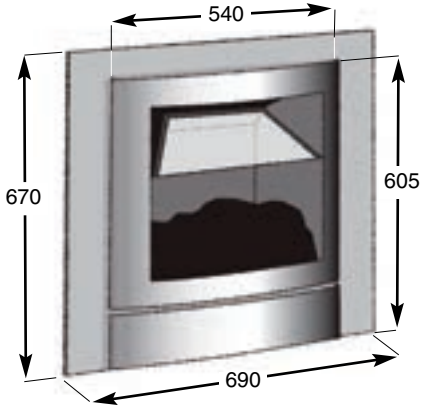

Fireplace model

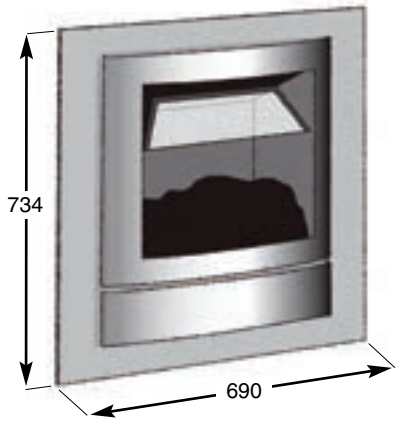

Hole in the Wall model

Measurements of visible parts only are shown.
For further measurements please see page 13.

Arc Trim finishes **Fireplace & Hole in the Wall models:**
Lacquered Brushed Stainless, Noir, Phosphorus

Outer Frame finishes for Arc Trim **Fireplace & Hole in the Wall models:**
Lacquered Brushed Stainless, Satin Black

* Patent pending

79.7% Efficiency

Energis Slimline
Vista

Energis Slimline Vista with Black/Antique Cast frame and Traditional Antique/Black fret

Energis Slimline
Vista

Energis Slimline Vista with Brass effect Profiled frame and Novello Antique fret

Energis Slimline Vista with Satin Black Flat frame and Lyric Black fret

74.2% Efficiency

The ***New*** Energis Slimline Vista, creative thinking for inspired living. Our Energis Vista range has redefined open fronted fuel effect efficiency and style, giving a sophisticated edge and a touch of luxury. Get the glow and bring your home to life. Available with a wide choice of the highest quality frames and frets to create a focal point for your home. Demand more from your fire, with a net efficiency of 74.2%, the Energis Slimline Vista makes no compromise on heat.

3 Sided frame finishes Fireplace models only:
Choose from **Flat**, **Profiled**, **Silhouette** or **Cast** styles, in a choice of beautiful finishes. See pages 24 and 25 for the full frame and fret selection.

Patent pending

GB Registered Design

Fireplace model

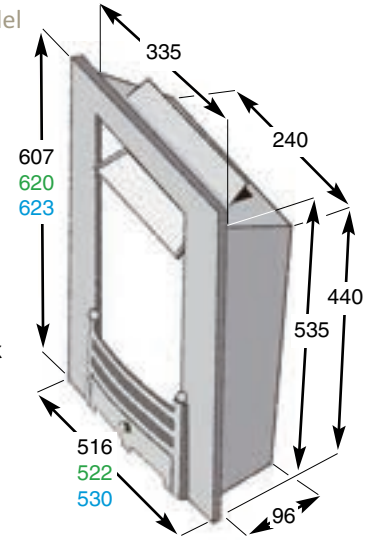

Flat frame, Silhouette frame & Contemporary Trim sizes shown in black
Profiled frame sizes shown in green
Cast frame sizes shown in blue

Our efficiency & output figures are the results of tests to BS7977-1:2009+A1:2013. Please see page 26 for further details

Energis Slimline
Vista
Contemporary Trim

- **Controls:**
  Manual, 3 Button Fully Sequential High Level or Fully Sequential Remote Control
- **Gas Type:**
  Natural Gas or LPG
- **Class 1 Efficiency:**
  74.2% Net (Nat.Gas)
  71.8% Net (LPG)
- **Output on High:**
  4.64kW (Nat.Gas)
  4.49kW (LPG)
- **Ventilation:**
  Not normally required
- **Interior:**
  Plain black
- **Effect:**
  Coal
- **Flue Types:**
  Class 1 or 2, Pre-Cast

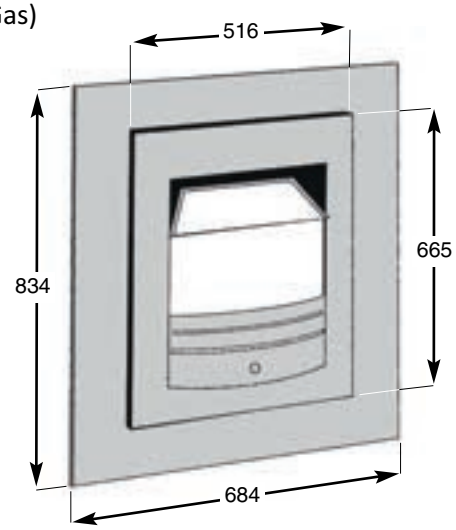

Hole in the Wall model

Energis Slimline Vista with Satin Black Contemporary Trim

Contemporary Trim finishes
Fireplace & Hole in the Wall models:
Brushed Stainless, Lacquered Brushed Stainless, Satin Black, Holographic Black, Antique Gold, Gun Metal

Outer Frame finishes for Contemporary Trim
Hole in the Wall models:
Lacquered Brushed Stainless, Holographic Black, Marfil Stone, Gun Metal
Size 684 x 834

Measurements of visible parts only are shown. For further measurements please see page 21. For fireplace model see page 21.

Energis Slimline
Vista
Arc Trim

Energis Slimline Vista with Noir Arc Trim

Energis Slimline Vista Hole in the Wall with Lacquered Brushed Stainless Arc Trim and Lacquered Brushed Stainless 4 Sided Outer Frame

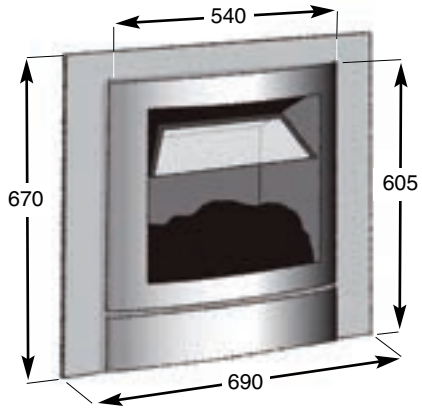

Fireplace model

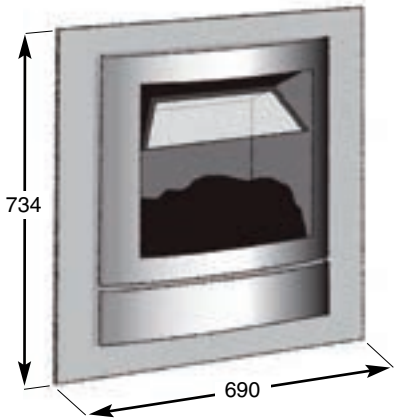

Hole in the Wall model

Measurements of visible parts only are shown.
For further measurements please see page 21.

The Energis Slimline Vista hosts our revolutionary and inspirational Vu-Tech* canopy which allows the fuel bed and flames to be shown to their full effect, creating something special. When used in conjunction with our Arc Trim in the fireplace, you achieve a traditional feel with a modern touch.

The fireplace version of the Arc Trim can be used without an Outer Frame, as shown above, or with an Outer Frame as shown on page 11.

Arc Trim finishes **Fireplace & Hole in the Wall models:**
Lacquered Brushed Stainless, Noir, Phosphorus

Outer Frame finishes for Arc Trim **Fireplace & Hole in the Wall models:**
Lacquered Brushed Stainless, Satin Black

* Patent pending

74.2% Efficiency

Frames

Flat Frames	Profiled Frames	Silhouette Frames	Cast Frames
Brushed Stainless	Satin Steel effect	Black/Brushed Stainless	
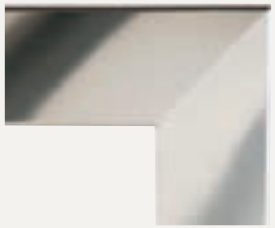 Polished Stainless	Chrome effect	Black/Polished Stainless	Black/Chrome
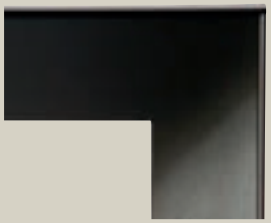 Satin Black	Textured Black		
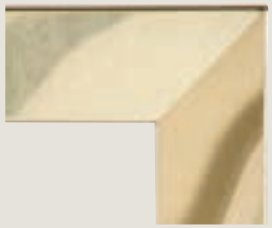 Brass	Brass effect	Black/Brass	Black/Antique

Due to the diversity of materials and processes used in manufacturing of Flat Frames and anodised Profiled Frames we cannot guarantee exact colour matches.

Frets

Novello 16”	Traditional 16”	Lyric 16”
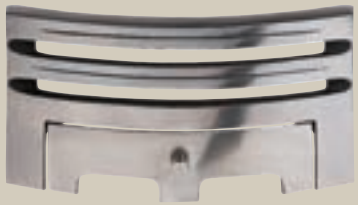 Novello Brushed	Traditional Brushed/Black	Lyric Brushed
Novello Chrome	Traditional Chrome/Black	Lyric Chrome
Novello Black	Traditional Black	Lyric Black
Novello Antique	Traditional Antique/Black	Lyric Antique

Due to the diversity of materials and processes used in manufacturing of cast Frets we cannot guarantee exact colour matches.

Technical Information

	Energis Hotbox		Energis Ultra 2		Energis Slimline Ultra 2		Energis Vista		Energis Slimline Vista	
Model	**EHN**	**EHL**	**EU2N**	**EU2L**	**ESU2N**	**ESU2L**	**EVN**	**EVL**	**ESVN**	**ESVL**
Gas Type	Nat. Gas	LPG	Nat. Gas	LPG	Nat. Gas	LPG	Nat. Gas	LPG	Nat. Gas	LPG
Control Options	Manual, 3 Button High Level, Remote Control		Manual, 3 Button High Level, Remote Control		Manual, 3 Button High Level, Remote Control		Manual, 3 Button High Level, Remote Control		Manual, 3 Button High Level, Remote Control	
Ventilation Required	← No * →		← No * →		← No * →		← No * →		← No * →	
Flue Types	Class 1 and 2 Flues & Pre-cast Flue †		Class 1 and 2 Flues & Pre-cast Flue †		Class 1 and 2 Flues & Pre-cast Flue †		Class 1 and 2 Flues & Pre-cast Flue †		Class 1 and 2 Flues & Pre-cast Flue †	
Fuel Bed	← Coal →		← Coal →		← Coal →		← Coal →		← Coal →	
Verified Efficiency Class	Class 2 Efficiency		Class 1 Efficiency		Class 1 Efficiency		Class 1 Efficiency		Class 1 Efficiency	
Efficiency Net	67.9%	67.2%	77.0%	77.0%	73.5%	72%	79.7%	78.4%	74.2%	71.8%
Max Input Net	6.26kW	6.25kW	6.26kW	6.25kW	6.26kW	6.25kW	6.26kW	6.25kW	6.26kW	6.25kW
Min Input Net	2.4kW	2.0kW	2.4kW	2.0kW	2.4kW	2.0kW	2.4 kW	2.0kW	2.4kW	2.0kW
Max Output	4.25kW	4.25kW	4.82kW	4.81kW	4.6kW	4.5kW	4.99kW	4.9kW	4.64kW	4.49kW
Min Output	1.4kW	1.14kW	1.5kW	1.23kW	1.5kW	1.2kW	1.6kW	1.25kW	1.5kW	1.2kW

* Ventilation not normally required in the UK subject to a satisfactory flue test.
Please note that ventilation requirements shown are for the UK and might vary from country to country.

† Designed to fit into any pre-cast flue that is compliant with building regulations.

In all cases local installation requirements must be followed.

The efficiency and output figures quoted in this brochure are the results of tests carried out under laboratory conditions by BSI using the methodology and equipment as laid down in BS7977-1:2009+A1:2013. This enables customers to make a direct comparison between one manufacturer's independently verified figures and another. It also allows our figures to be used in the UK Government's Standard Assessment Procedure (SAP) for the Energy Rating of Dwellings. When installed in any given property the overall performance of any fire could be affected by the individual attributes of the installation such as room insulation, ventilation and the characteristics of the chimney etc.

Control Options

Fully Sequential Remote Control

Powered by 4 standard AA batteries. As well as on/off and variable flame height control, our fully sequential Thermatronic system turns the pilot on and off when extinguishing the fire.

Manual

The Manual control features a single action 'twist and ignite' control valve which establishes the pilot light and allows you to adjust the flame height.

3 Button Fully Sequential High Level Touch Control

As well as on/off and variable flame height our 3 Button High Level Touch Control turns the pilot on and off when extinguishing the fire.

All electronic control systems are powered by standard AA batteries and do not need mains electricity.

Flue Types

Nu-Flame has Energis fires to suit the various types of flue you are likely to have in your home.

Below are brief details. The photographs are a guide only to help identify the type of flue.

Your Nu-Flame stockist will give you further details.

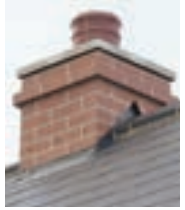

Chimney - Class 1 Flue

All Energis fires are suitable for a conventional brick built chimney, subject to satisfactory flue test.

Pre-Fabricated - Class 1 & 2 Flues

A pre-fabricated flue is characterised by a metal pipe and terminal appearing through the roof. All Energis fires are approved for installation with a pre-fabricated flue system, subject to a satisfactory flue test.

Pre-Cast Flue

All Energis fires are suitable for use with any pre-cast flue that is compliant with building regulations. With some installations it might be necessary to have a deeper mantel rebate, or carry out other additional work. Your Nu-Flame stockist can advise you.

Issue 06.16

Photography, Design and Production by TPW Graphics Ltd (01206) 393888

Nu-Flame Ltd

Unit 4, Kimpton Trade & Business Centre, Minden Road, Sutton, Surrey, SM3 9PF

T : 020 8254 6802 F : 020 8641 9992

Email : sales@nu-flame.co.uk Web : www.nu-flame.co.uk